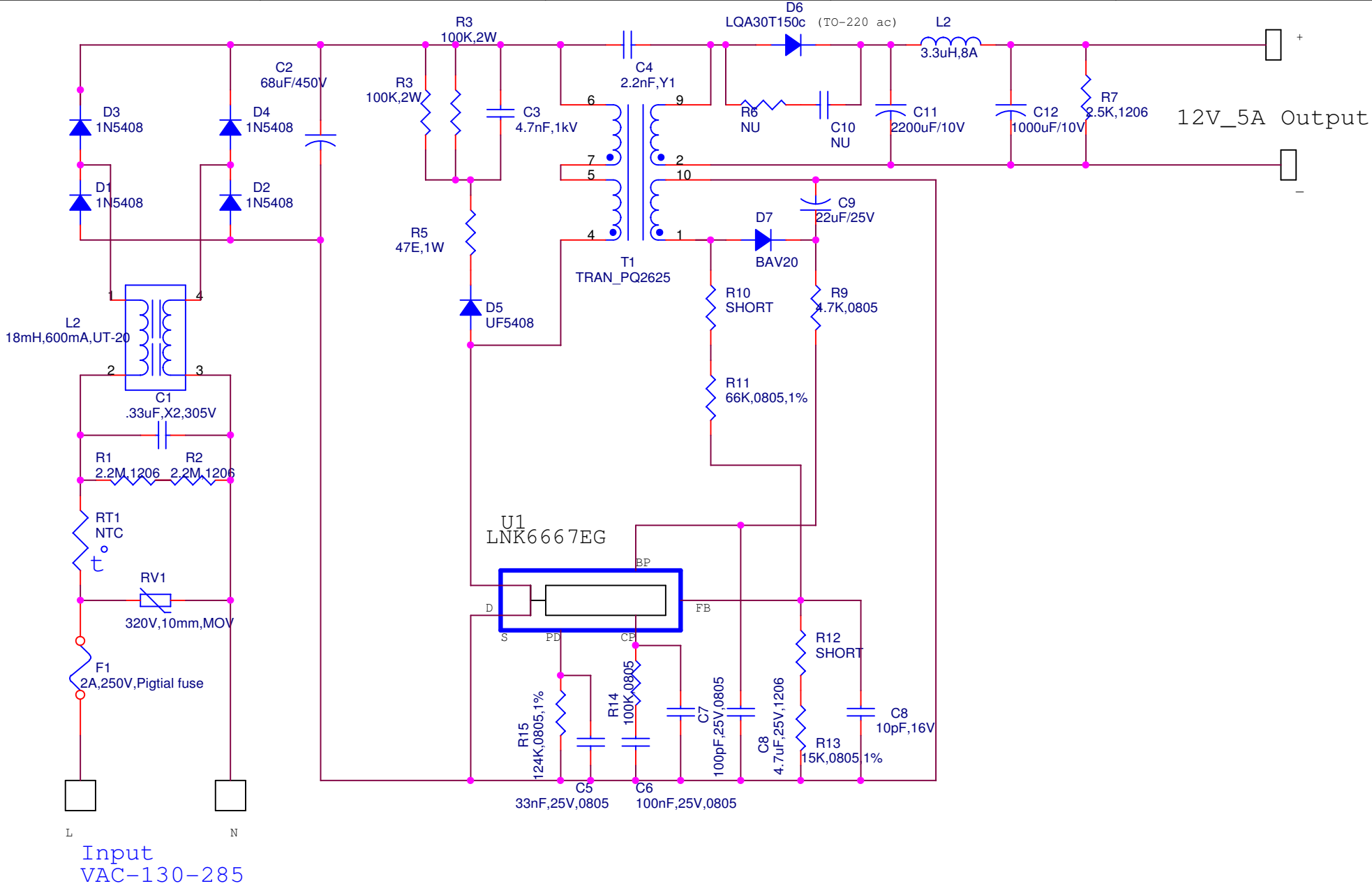

Title	12V@5A Schematic for Led Streep light.	
Size A	Document Number 51 Prashant Mahi	Rev 1
Date: Wednesday, March 02, 2016	Sheet 1 of 1	